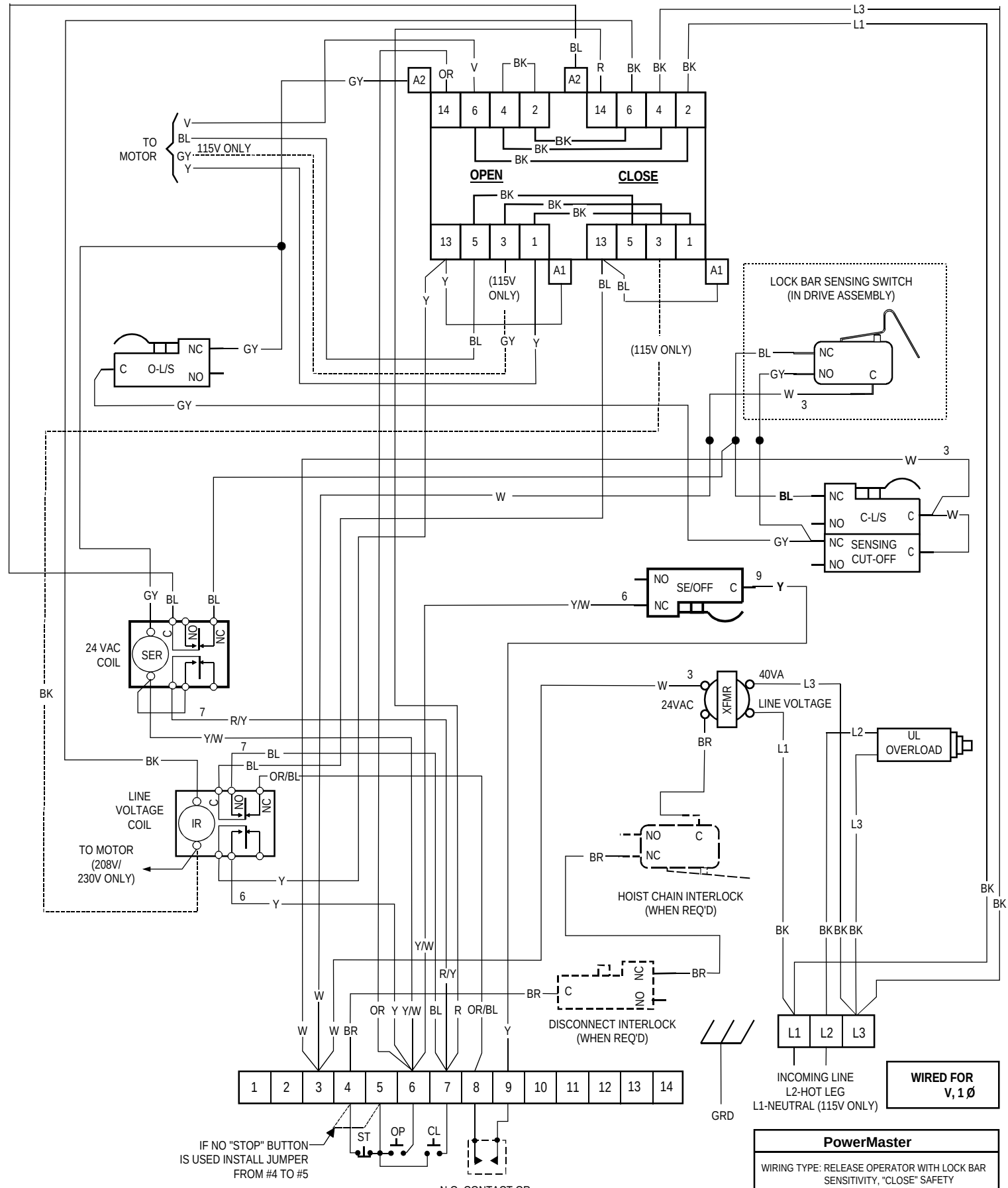

OPERATOR SHIPPED AS CONSTANT PRESSURE IN BOTH DIRECTION.
FOR MOMENTARY "OPEN" - MOVE ORANGE WIRE FROM #6 TO #5.
FOR MOMENTARY "CLOSE" - MOVE RED WIRE FROM #7 TO #5.

NOTE: IF UNIT IS WIRED FOR MOMENTARY CONTACT ON "OPEN" AND "CLOSE" MOVE RED/YELLOW WIRE FROM #7 TO # 5.

PowerMaster

WIRING TYPE: RELEASE OPERATOR WITH LOCK BAR SENSITIVITY, "CLOSE" SAFETY

MTR/CNTR: 1 Ø

DATE: 4-02	REV. 2
BY: F.S.	R.P.L.

SPECIAL: LOCK BAR SENSING CIRCUIT

WIRING DIAGRAM NO. 41-3 LBS

© Copyright PowerMaster 1997
No portion of this diagram may be reproduced without the expressed written permission of the manufacturer.